Structural Criteria for Residential Rooftop Solar Energy Installations

STRUCTURAL CRITERIA FOR RESIDENTIAL FLUSH-MOUNTED SOLAR ARRAYS

1. ROOF CHECKS

A. Visual Review/Contractor's Site Audit of Existing Conditions:

1) Is the roof a single roof without a reroof overlay? ☐ Y ☐ N

2) Does the roof structure appear structurally sound, without signs of alterations or significant structural deterioration or sagging, as illustrated in Figure 1? ☐ Y ☐ N

B. Roof Structure Data:

1) Measured roof slope (e.g. 6:12): _____:12

2) Measured rafter spacing (center-to-center): _____ inch

3) Type of roof framing (rafter or manufactured truss): ☐ Rafter ☐ Truss

4) Measured rafter size (e.g. 13/4 x 33/4, not 2x4): ____ x _____ inch

5) Measured rafter horizontal span (see Figure 4): ____' - ____"ft-in

6) Horizontal rafter span per Table 2: ____' - ____"ft-in

7) Is measured horizontal rafter span less than Table 2 span? ☐ Y ☐ N ☐ Truss

2. SOLAR ARRAY CHECKS

A. Flush-mounted Solar Array:

1) Is the plane of the modules (panels) parallel to the plane of the roof? ☐ Y ☐ N

2) Is there a 2" to 10" gap between underside of module and the roof surface? ☐ Y ☐ N

3) Modules do not overhang any roof edges (ridges, hops, gable ends, eaves)? ☐ Y ☐ N

B. Do the modules plus support components weigh no more than: 4 psf for photovoltaic arrays or 5 psf for solar thermal arrays? ☐ Y ☐ N

C. Does the array cover no more than half of the total roof area (all roof planes)? ☐ Y ☐ N

D. Are solar support component manufacturer's project-specific completed worksheets, tables with relevant cells circled, or web-based calculator results attached? ☐ Y ☐ N

E. Is a roof plan of the module and anchor layout attached? (see Figure 2) ☐ Y ☐ N

F. Downward Load Check (Anchor Layout Check):

1) Proposed anchor horizontal spacing (see Figure 2): ____' - ____"ft-in

2) Horizontal anchor spacing per Table 1: ____' - ____"ft-in

3) Is proposed anchor horizontal spacing less than Table 1 spacing? ☐ Y ☐ N

G. Wind Uplift Check (Anchor Fastener Check):

1) Anchor fastener data (see Figure 3):

a. Diameter of lag screw, hanger bolt or self-drilling screw: _____ inch

b. Embedment depth of rafter: _____ inch

c. Number of screws per anchor (typically one): _____

d. Are 5/16" diameter lag screws with 2.5" embedment into the rafter used, OR does the anchor fastener meet the manufacturer's guidelines? ☐ Y ☐ N

3. SUMMARY

A. All items above are checked YES. No additional calculations are required.

B. One or more items are checked NO. Attach project-specific drawings and calculations stamped and signed by a California-licensed Civil or Structural Engineer.

Job Address: _____ Permit #: _____

Contractor/Installer: _____ License # & Class: _____

Signature: _____ Date: _____ Phone #: _____

Table 1. Maximum Horizontal Anchor Spacing				
Roof Slope		Rafter Spacing		
		16” o.c.	24” o.c.	32” o.c.
Photovoltaic Arrays (4 psf max)				
Flat to 6:12	0° to 26°	5'-4"	6'-0"	5'-4"
7:12 to 12:12	27° to 45°	1'-4"	2'-0"	2'-8"
13:12 to 24:12	46° to 63°	1'-4"	2'-0"	2'-8"
Solar Thermal Arrays (5 psf max)				
Flat to 6:12	0° to 26°	4'-0"	4'-0"	5'-4"
7:12 to 12:12	27° to 45°	1'-4"	2'-0"	2'-8"
13:12 to 24:12	46° to 63°	Calc. Req'd	Calc. Req'd	Calc. Req'd

Solar support component manufacturer’s guidelines may be relied upon to ensure the array above the roof is properly designed, but manufacturer’s guidelines typically do NOT check to ensure that the roof itself can support the concentrated loads from the solar array. Table 1 assumes that the roof complied with the building code in effect at the time of construction, and places limits on anchor horizontal spacing to ensure that a roof structure is not overloaded under either downward loads or wind uplift loads. Note 4 below lists the basic assumptions upon which this table is based.

Table 1 Notes:

1. Anchors are also known as “stand-offs”, “feet”, “mounts” or “points of attachment”. Horizontal anchor spacing is also known as “cross-slope” or “east-west” anchor spacing (see Figure 2).
2. If anchors are staggered from row-to-row going up the roof, the anchor spacing may be twice that shown above, but no greater than 6’-0”.
3. For manufactured plated wood trusses at slopes of flat to 6:12, the horizontal anchor spacing shall not exceed 4’-0” and anchors in adjacent rows shall be staggered.
4. This table is based on the following assumptions:
   - The roof structure conformed to building code requirements at the time it was built.
   - The attached list of criteria are met.
   - Mean roof height is not greater than 40 feet.
   - Roof sheathing is at least 7/16” thick oriented strand board or plywood. 1x skip sheathing is acceptable.
   - If the dwelling is in Wind Exposure B (typical urban, suburban or wooded areas farther than 500
   - yards from large open fields), no more than one of the following conditions apply:
     - The dwelling is located in a special wind region with design wind speed between 115 and 130
   - mph per ASCE 7-10, or
     - The dwelling is located on the top half of a tall hill, provided average slope steeper is less than 15%.
   - If the dwelling is In Wind Exposure C (within 500 yards of large open fields or grasslands), all of the
   - following conditions apply:
     - Design wind speed is 110 mph or less (not in a Special Wind Region), and
     - The dwelling is not located on the top half of a tall hill.
   - The solar array displaces roof live loads (temporary construction loads) that the roof was originally
   - designed to carry.

Table 2. Roof Rafter Maximum Horizontal Span (feet inches) [1]								
Assumed Vintage	Nominal Size	Actual Size	Non-Tile Roof [2]			Tile Roof [3]		
			Rafter Spacing					
			16" o.c.	24" o.c.	32" o.c.	16" o.c.	24" o.c.	32" o.c.
Post-1960	2x4	1½"x3½"	9'-10"	8'-0"	6'-6"	8'-6"	6'-11"	5'-6"
	2x6	1½"x5½"	14'-4"	11'-9"	9'-6"	12'-5"	10'-2"	8'-0"
	2x8	1½"x7¼"	18'-2"	14'-10"	12'-0"	15'-9"	12'-10"	10'-3"
Pre-1960	2x4	1¾"x3¾"	11'-3"	9'-9"	7'-9"	10'-3"	8'-6"	6'-9"
	2x6	1¾"x5¾"	17'-0"	14'-0"	11'-3"	14'-9"	12'-0"	9'-9"
	2x8	1¾"x7¾"	22'-3"	18'-0"	14'-6"	19'-0"	15'-6"	12'-6"

Beyond a visual review by the Contractor checking for unusual sagging or deterioration, some CBOs may want additional assurance that the roof structure complies with structural building code requirements. Table 2 is an optional table some CBOs may elect to use to provide additional assurance by requiring a check of existing roof rafter spans, and supports optional criteria 1.B.5 and 1.B.6. For post-1960 construction, these span tables match the rafter span tables found in the 2013 California Building and Residential codes. For pre-1960 construction, the rafter span tables are based on structural calculations with lumber sizes and wood species & grade appropriate for older construction. Note 5 below lists the basic assumptions upon which this table is based.

Table 2 Notes:

1. See Figure 4 for definition of roof rafter maximum horizontal span.
2. “Non-tile Roof ” = asphalt shingle, wood shingle & wood shake, with an assumed roof assembly weight of 10 psf.
3. “Tile Roof ” = clay tile or cement tile, with an assumed roof assembly weight of 20psf
4. Unaltered manufactured plated-wood trusses may be assumed to be code compliant and meet intent of Table 2.
5. This table is based on the following assumptions:
    - Span/deflection ratio is equal to or greater than 180.
    - For post-1960 construction, wood species and grade is Douglas Fir-Larch No. 2.
    - For pre-1960 construction, wood species and grade is Douglas Fir-Larch No. 1.
    - Other wood species and/or grade are also acceptable if allowable bending stress is equal or greater to that listed above.

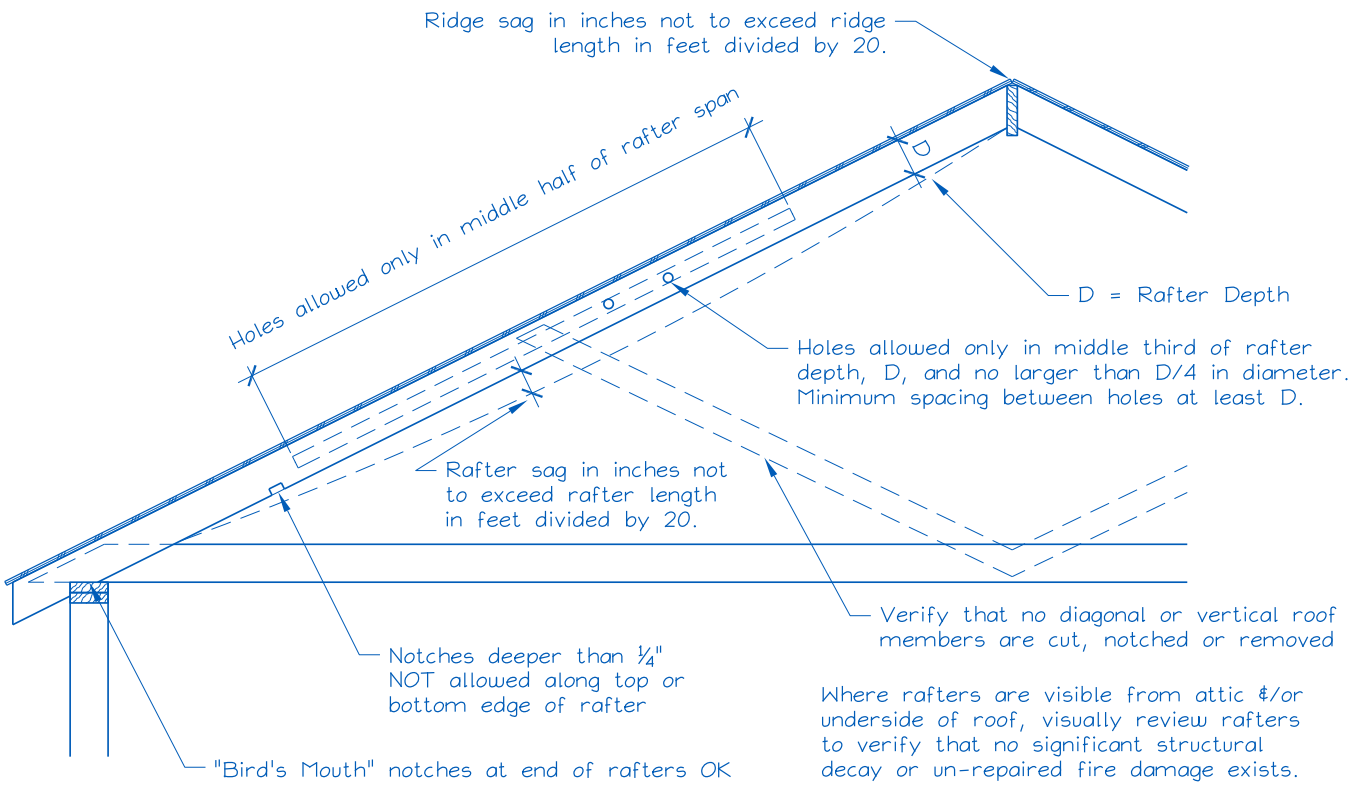

Figure 1. Roof Visual Structural Review (Contractor's Site Audit) of Existing Conditions.

The site auditor should verify the following:

6. No visually apparent disallowed rafter holes, notches and truss modifications as shown above.
7. No visually apparent structural decay or un-repaired fire damage.
8. Roof sag, measured in inches, is not more than the rafter or ridge beam length in feet divided by 20.

Rafters that fail the above criteria should not be used to support solar arrays unless they are first strengthened.

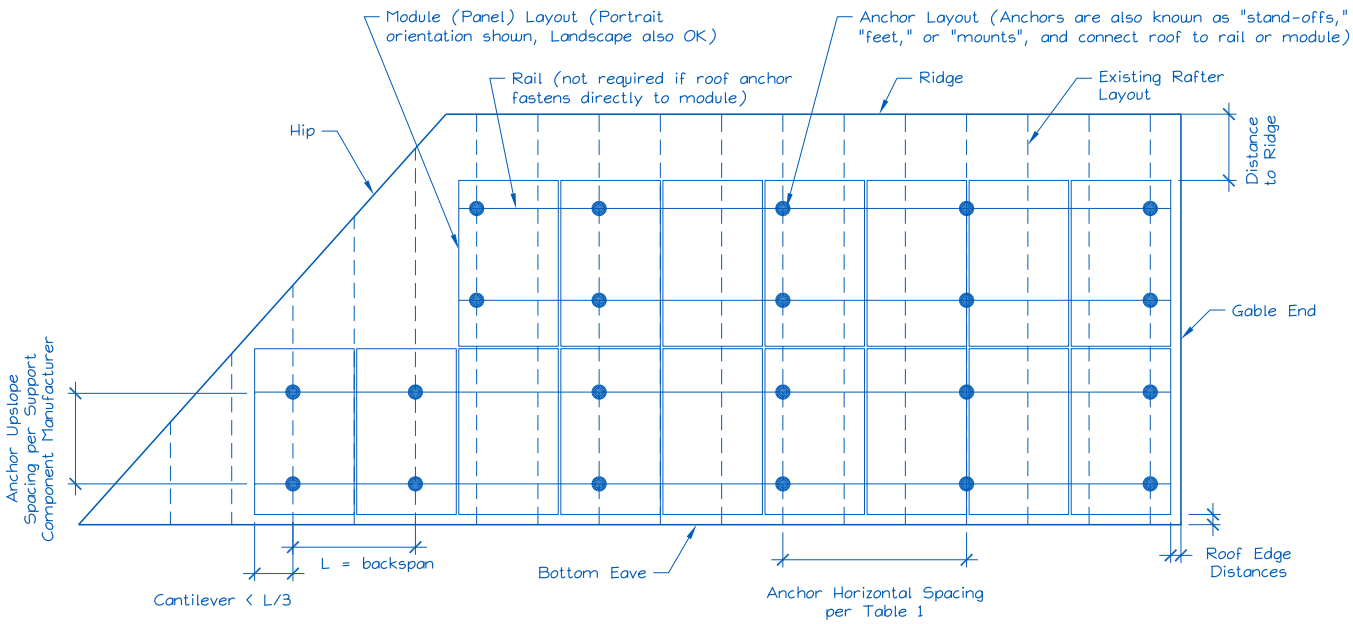

Figure 2. Sample Solar Panel Array and Anchor Layout Diagram (Roof Plan).

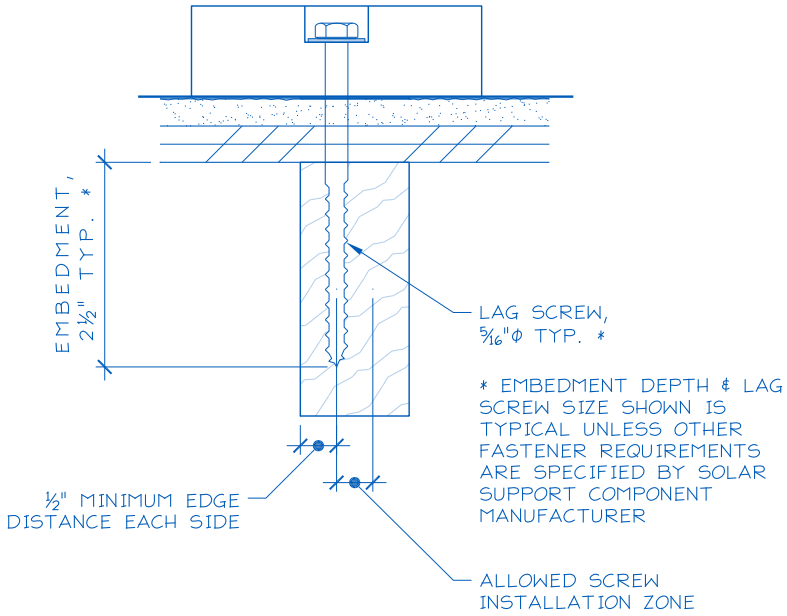

Figure 3. Typical Anchor with Lag Screw Attachment.

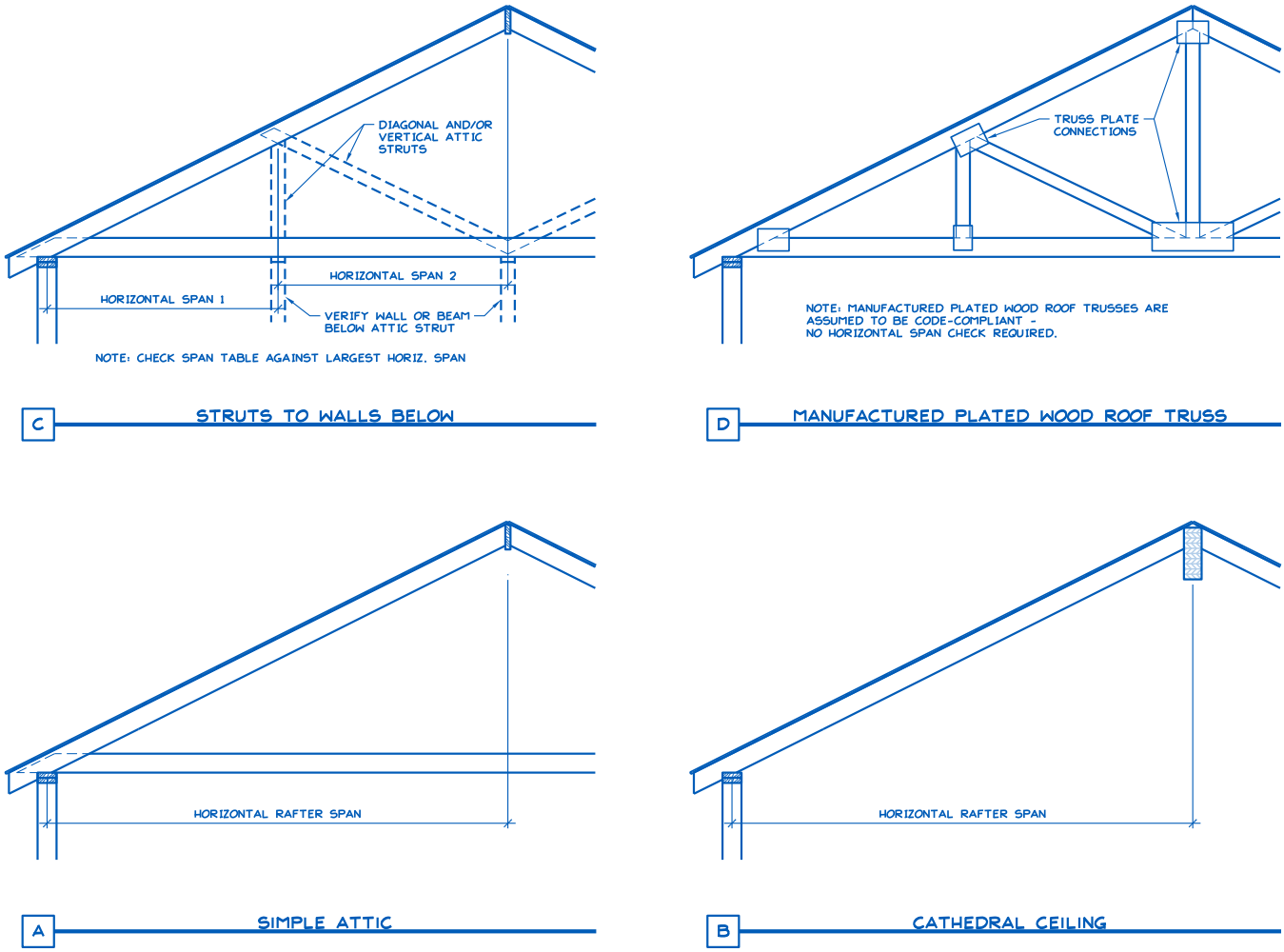

Figure 4. Definition of Rafter Horizontal Span.